AIR CONDITIONER
INDOOR UNIT (Wall Mounted Type)

For authorized service personnel only.

- Installation must be performed in accordance with the requirement of NEC and CEC by authorized personnel only.

INSTALLATION MANUAL

PART No. 9320456016

English

Français

Español

Contents

1. SAFETY PRECAUTIONS 1
2. ABOUT THIS PRODUCT 2
3. GENERAL SPECIFICATIONS 2
4. SELECTING THE INSTALLATION LOCATION 3
5. INSTALLATION WORK 3
6. ELECTRICAL WIRING 5
7. FINISHING 6
8. FRONT PANEL REMOVAL AND INSTALLATION 7
9. REMOTE CONTROLLER INSTALLATION 7
10. OPTIONAL KIT INSTALLATION 8
11. INSTALLATION WORK 8
12. SELECTING THE REMOTE CONTROLLER CUSTOM CODE 9
13. FUNCTION SETTING 9
14. TEST RUN 11
15. CUSTOMER GUIDANCE 11
16. ERROR CODES 11

1. SAFETY PRECAUTIONS

1.1. IMPORTANT! Please read before starting

This air conditioning system meets strict safety and operating standards.
As the installer or service person, it is an important part of your job to install or service the system so it operates safely and efficiently.

For safe installation and trouble-free operation, you must:

- Carefully read this instruction booklet before beginning.
- Follow each installation or repair step exactly as shown.
- Observe all local, state, and national electrical codes.
- Pay close attention to all warning and caution notices given in this manual.

⚠ WARNING	This symbol refers to a hazard or unsafe practice which can result in severe personal injury or death.
⚠ CAUTION	This symbol refers to a hazard or unsafe practice which can result in personal injury and the potential for product or property damage.

- Hazard alerting symbols

Electrical

Safety/alert

If Necessary, Get Help

These instructions are all you need for most installation sites and maintenance conditions. If you require help for a special problem, contact our sales/service outlet or your certified dealer for additional instructions.

In Case of Improper Installation

The manufacturer shall in no way be responsible for improper installation or maintenance service, including failure to follow the instructions in this document.

1.2. Special precautions

When Wiring

ELECTRICAL SHOCK CAN CAUSE SEVERE PERSONAL INJURY OR DEATH. ONLY A QUALIFIED, EXPERIENCED ELECTRICIAN SHOULD ATTEMPT TO WIRE THIS SYSTEM.

- Do not supply power to the unit until all wiring and tubing are completed or reconnected and checked.
- Highly dangerous electrical voltages are used in this system. Carefully refer to the wiring diagram and these instructions when wiring. Improper connections and inadequate earthing (grounding) can cause accidental injury or death.
- Earth (Ground) the unit following local electrical codes.
- Connect all wiring tightly. Loose wiring may cause overheating at connection points and a possible fire hazard.

When Transporting

Be careful when picking up and moving the indoor and outdoor units. Get a partner to help, and bend your knees when lifting to reduce strain on your back. Sharp edges or thin aluminum fins on the air conditioner can cut your fingers.

When Installing...

...In a Ceiling or Wall

Make sure the ceiling/wall is strong enough to hold the unit's weight. It may be necessary to construct a strong wood or metal frame to provide added support.

...In a Room

Properly insulate any tubing run inside a room to prevent "sweating" that can cause dripping and water damage to walls and floors.

...In an Area with High Winds

Securely anchor the outdoor unit down with bolts and a metal frame.
Provide a suitable air baffle.

...In a Snowy Area (for Heat Pump-type Systems)

Install the outdoor unit on a raised platform that is higher than drifting snow.

When Connecting Refrigerant Tubing

- Keep all tubing runs as short as possible.
- Use the flare method for connecting tubing.
- Apply refrigerant lubricant to the matching surfaces of the flare and union tubes before connecting them, then tighten the nut with a torque wrench for a leak-free connection.
- Check carefully for leaks before opening the refrigerant valves.

When Servicing

- Turn the power OFF at the main circuit breaker panel before opening the unit to check or repair electrical parts and wiring.
- Keep your fingers and clothing away from any moving parts.
- Clean up the site after you finish, remembering to check that no metal scraps or bits of wiring have been left inside the unit being serviced.
- After installation, explain correct operation to the customer, using the operating manual.

⚠ WARNING
Never touch electrical components immediately after the power supply has been turned off. Electric shock may occur. After turning off the power, always wait 5 minutes before touching electrical components.
If refrigerant leaks while work is being carried out, ventilate the area. If the refrigerant comes in contact with a flame, it produces a toxic gas.

⚠ CAUTION
Do not attempt to install the air conditioner or a part of the air conditioner by yourself.
This unit must be installed by qualified personnel with a capacity certificate for handling refrigerant fluids. Refer to regulation and laws in use on installation place.
This unit is part of a set constituting an air conditioner. It must not be installed alone or with non-authorized by the manufacturer.
Always use a separate power supply line protected by a circuit breaker operating on all wires with a distance between contact of 1/8 in. (3 mm) for this unit.
The unit must be correctly earthed (grounded) and the supply line must be equipped with a differential breaker in order to protect the persons.
The units are not explosion proof and therefore should not be installed in explosive atmosphere.
When moving, consult authorized service personnel for disconnection and installation of the unit.
Do not place any other electrical products or household belongings under indoor unit or outdoor unit. Dripping condensation from the unit might get them wet, and may cause damage or malfunction of your property.

2. ABOUT THIS PRODUCT

2.1. Precautions for using R410A refrigerant

The basic installation work procedures are the same as conventional refrigerant (R22) models. **However, pay careful attention to the following points:**
Since the working pressure is 1.6 times higher than that of conventional refrigerant (R22) models, some of the piping and installation and service tools are special. (See the following table.) Especially, when replacing a conventional refrigerant (R22) model with a new refrigerant R410A model, always replace the conventional piping and flare nuts with the R410A piping and flare nuts.
Models that use refrigerant R410A have a different charging port thread diameter to prevent erroneous charging with conventional refrigerant (R22) and for safety. Therefore, check beforehand. [The charging port thread diameter for R410A is 1/2-20 UNF.]
Be more careful that foreign matter (oil, water, etc.) does not enter the piping than with refrigerant (R22) models. Also, when storing the piping ,securely seal the opening by pinching, taping, etc.
When charging the refrigerant, take into account the slight change in the composition of the gas and liquid phases. And always charge from the liquid phase where refrigerant composition is stable.

2.2. Special tools for R410A

Tool name	Contents of change
Gauge manifold	Pressure is high and cannot be measured with a conventional (R22) gauge. To prevent erroneous mixing of other refrigerants, the diameter of each port has been changed. It is recommended the gauge with seals -30 inHg to 768 psi (-0.1 to 5.3 MPa) for high pressure. -30 inHg to 551 psi (-0.1 to 3.8 MPa) for low pressure.
Charge hose	To increase pressure resistance, the hose material and base size were changed.
Vacuum pump	A conventional vacuum pump can be used by installing a vacuum pump adapter.
Gas leakage detector	Special gas leakage detector for HFC refrigerant R410A.

Copper pipes

It is necessary to use seamless copper pipes and it is desirable that the amount of residual oil is less than 0.004 oz/100 ft. (40 mg/10 m). Do not use copper pipes having a collapsed, deformed or discolored portion (especially on the interior surface). Otherwise, the expansion value or capillary tube may become blocked with contaminants.
As an air conditioner using R410A incurs pressure higher than when using R22, it is necessary to choose adequate materials.

⚠ WARNING
Do not use the existing (for R22) piping and flare nuts. If the existing materials are used, the pressure inside the refrigerant cycle will rise and cause failure, injury, etc. (Use the special R410A materials.)
When installing and relocating the air conditioner, do not mix gases other than the specified refrigerant (R410A) to enter the refrigerant cycle. If air or other gas enters the refrigerant cycle, the pressure inside the cycle will rise to an abnormally high value and cause failure, injury, etc.

2.3. For authorized service personnel only.

⚠ WARNING
For the air conditioner to operate satisfactorily, install it as outlined in this installation manual.
Connect the indoor unit and outdoor unit or branch box with the air conditioner piping and cables available from your local distributor. This installation manual describes the correct connections using the installation set available from your local distributor.
Do not turn on the power until all installation work is complete.

⚠ CAUTION
This installation manual describes how to install the indoor unit only. To install the outdoor unit or branch box, refer to the installation manual included with the outdoor unit or branch box.

- Be careful not to scratch the air conditioner when handling it.
- After installation, explain correct operation to the customer, using the operating manual.

2.4. Accessories

The following installation accessories are supplied. Use them as required.

Name and Shape	Q'ty	Name and Shape	Q'ty
Operating Manual	1	Cloth tape	1
Installation Manual (This manual)	1	Tapping screw (M4 × 25 mm)	5
Wall hook bracket	1	Tapping screw (M3 × 12 mm)	2
Remote controller	1	Air cleaning filter	2
Battery	2	Filter holders	2
Remote controller holder	1	Seal A 15 model only	1

The following items are necessary to install this air conditioner. (The items are not included with the air conditioner and must be purchased separately.)

Name	Q'ty	Name	Q'ty
Connection pipe assembly	1	Wall cap	1
Connection cable (4-conductor)	1	Saddle	1 set
Wall pipe	1	Drain hose	1
Decorative tape	1	Tapping screws	1 set
Vinyl tape	1	Sealant	1

2.5. Additional materials required for installation

A. Refrigeration (armored) tape
B. Insulated staples or clamps for connecting wire (See your local electrical codes.)
C. Putty
D. Refrigeration lubricant
E. Clamps or saddles to secure refrigerant piping

2.6. Optional parts

Refer to each installation manual for the method of installing optional parts.

Parts name	Model No.	Application
Wired Remote Controller*	UTY-RVNUM	For air conditioner operation
Wired Remote Controller*	UTY-RNNUM	For air conditioner operation
Simple Remote Controller*	UTY-RSNUM	For air conditioner operation
External connect kit*	UTY-XWZXZ5	For control input/output port
Communication kit	UTY-TWBXF1	For the installation of optional parts

* Optional communication kit is necessary for the installation.

3. GENERAL SPECIFICATIONS

This INSTALLATION MANUAL briefly outlines where and how to install the air conditioning system. Please read over the entire set of instructions for the indoor and outdoor units and make sure all accessory parts listed are with the system before beginning.

3.1. Type of copper pipe and insulation material

⚠ CAUTION
Refer to the installation manual for the outdoor unit for description of allowable pipe length and height difference.

MODEL	Diameter	
	Liquid pipe	Gas pipe
9,12	1/4 in. (6.35 mm)	3/8 in. (9.52 mm)
15	1/4 in. (6.35 mm)	1/2 in. (12.70 mm)

⚠ CAUTION

Install heat insulation around both the gas and liquid pipes. Failure to do so may cause water leaks.
Use heat insulation with heat resistance above 248 °F (120 °C). Reverse cycle model only.
In addition, if the humidity level at the installation location of the refrigerant piping is expected to exceed 70%, install heat insulation around the refrigerant piping. If the expected humidity level is 70-80%, use heat insulation that is 3/4 in. (15 mm) or thicker and if the expected humidity exceeds 80%, use heat insulation that is 13/16 in. (20 mm) or thicker.
If heat insulation is used that is not as thick as specified, condensation may form on the surface of the insulation. In addition, use heat insulation with heat conductivity of 0.045 W/(m•K) or less (at [68 °F (20 °C)]).

3.2. Electrical requirement

The indoor unit is powered from the outdoor unit or branch box. Do not power indoor unit from separate power source.

⚠ WARNING

Refer to local codes for acceptable cable type.

4. SELECTING THE INSTALLATION LOCATION

Decide the mounting position with the customer as follows:

(1) Install the indoor unit level on a strong wall which is not subject to vibration.
(2) The inlet and outlet ports should not be obstructed: the air should be able to blow all over the room.
(3) Install the unit a dedicated electrical branch circuit.
(4) Do not install the unit where it will be exposed to direct sunlight.
(5) Install the unit where connection to the outdoor unit or branch box is easy.
(6) Install the unit where the drain pipe can be easily installed.
(7) Take servicing, etc. into consideration and leave the spaces shown in [5.1. Installation dimensions]. Also install the unit where the filter can be removed.

Correct initial installation location is important because it is difficult to move unit after it is installed.

⚠ WARNING

Install the air conditioner in a location which can withstand a load of at least 3 times the weight of the main unit and which will not amplify sound or vibration. If the installation location is not strong enough, the indoor unit may fall and cause injuries.

Withstandable weight (Unit weight x 3*)
93 Lbs (42kg)

*In accordance with UL standards.

⚠ CAUTION

Do not install the unit in the following areas:
- Area with high salt content, such as at the seaside. It will deteriorate metal parts, causing the parts to fail or the unit to leak water.
- Area filled with mineral oil or containing a large amount of splashed oil or steam, such as a kitchen.
  It will deteriorate plastic parts, causing the parts to fail or the unit to leak water.
- Area that generates substances that adversely affect the equipment, such as sulfuric gas, chlorine gas, acid, or alkali.
  It will cause the copper pipes and brazed joints to corrode, which can cause refrigerant leakage.
- Area that can cause combustible gas to leak, contains suspended carbon fibers or flammable dust, or volatile inflammables such as paint thinner or gasoline.
- If gas leaks and settles around the unit, it can cause a fire.
- Area where animals may urinate on the unit or ammonia may be generated.
- Do not use the unit for special purposes, such as storing food, raising animals, growing plants, or preserving precision devices or art objects.
  It can degrade the quality of the preserved or stored objects.
- Do not install where there is the warning of combustible gas leakage.
- Do not install the unit near a source of heat, steam, or flammable gas.
- Install the unit where drainage does not cause any trouble.
- Install the indoor unit, outdoor unit, branch box, power supply cable, transmission cable, and remote control cable at least 40 in. (1m) away from a television or radio receivers. The purpose of this is to prevent TV reception interference or radio noise. (Even if they are installed more than 40 in. (1m) apart, you could still receive noise under some signal conditions.)
- If children under 10 years old may approach the unit, take preventive measures so that they cannot reach the unit.
- Install the indoor unit on the wall where the height from the floors more than 70 in. (1.8 m).

5. INSTALLATION WORK

⚠ CAUTION

- Do not hit or push the human sensor. This may lead to damage or malfunction.
- Do not touch the human sensor. Any scratches or dirt may lead to incorrect detection.
- Do not place large objects near the human sensor. Also keep heating units outside the sensor's detection area.

Detection range of the human sensor is as follows.

Vertical angle 90° (Side view) Horizontal angle 100° (Top view)

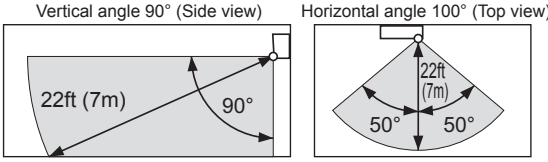

5.1. Installation dimensions

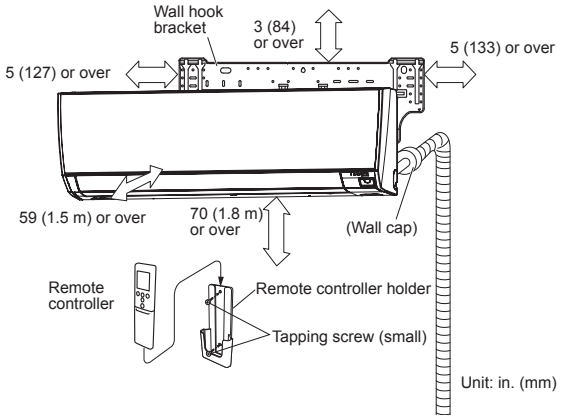

5.2. Indoor unit piping direction

The piping can be connected in the 6 directions indicated in the following.
When the piping is connected to direction (2) , (3) , (4) or (5) , cut along the piping groove on the side of the front cover with a hacksaw.

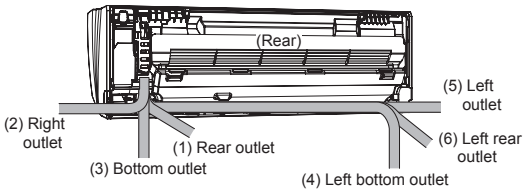

5.3. Cutting the hole in the wall for the connecting piping

(1) Cut a 65 mm diameter hole in the wall at the position shown in the following.
(2) Cut the hole so that the outside end is lower (5 to 10 mm) than the inside end.
(3) Always align the center of the wall hole. If misaligned, water leakage will occur.
(4) Cut the wall pipe to match the wall thickness, stick it into the wall cap, fasten the cap with vinyl tape, and stick the pipe through the hole.
(5) For left piping and right piping, cut the hole a little lower so that drain water will flow freely.

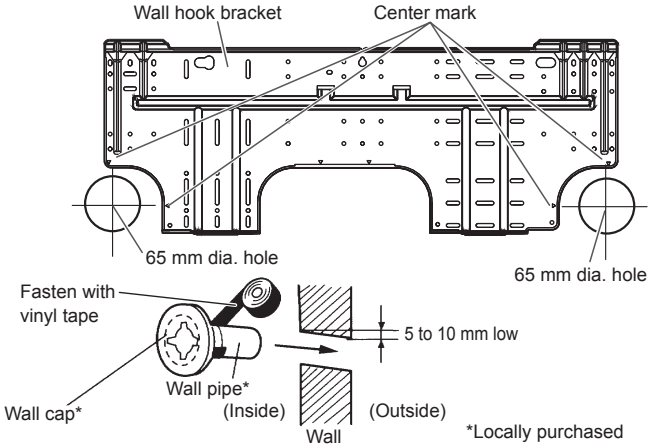

⚠ WARNING

Always use the wall pipe. If the wall pipe is not used, the cable that is connected between the indoor unit and the outdoor unit may touch metal, and cause an electric discharge.

5.4. Installing the wall hook bracket

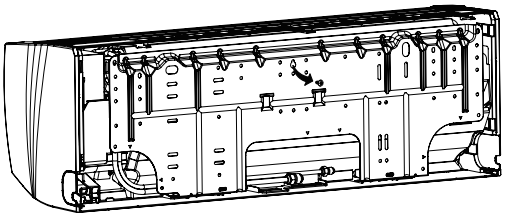

• Remove the wall hook bracket from the indoor unit. (Remove screw).

(1) Install the wall hook bracket so that it is correctly positioned horizontally and vertically. If the wall hook bracket is titled, water will drip to the floor.

(2) Install the wall hook bracket so that it is strong enough to support the weight of the unit.

- Fasten the wall hook bracket to the wall with 5 or more screws through the holes near the outer edge of the bracket.
- Check that there is no rattle at the wall hook bracket.

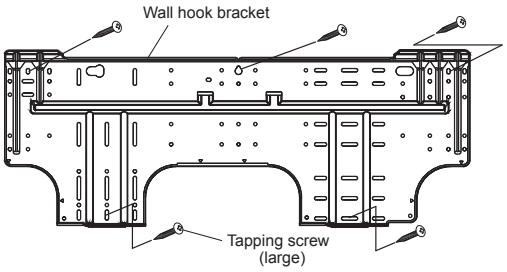

⚠ CAUTION

Install the wall-hook bracket both horizontally and vertically aligned.
Misaligned installation may cause water leakage.

5.5. Forming the drain hose and pipe

[Rear piping, Right piping, Bottom piping]

- Install the indoor unit piping in the direction of the wall hole and bind the drain hose and pipe together with vinyl tape.
- Install the piping so that the drain hose is at the bottom.
- Wrap the pipes of the indoor unit that are visible from the outside with decorative tape.

[For Left rear piping, Left piping]

Interchange the drain cap and the drain hose.

⚠ CAUTION

- Insert drain hose and drain cap securely. Drain should slope down to avoid water leakage.
- When inserting, be sure not to attach any material besides water. If any other material is attached, it will cause deterioration and water leakage.
- After removing drain hose, be sure not to forget mounting drain cap.
- Be sure to fix the drain hose with tape to the bottom of piping.
- Prevent drain water freezing under low temperature environment.
  When installing indoor unit's drain hose outdoors, necessary measure for frost protection should be taken to prevent drain water freezing.
  Under low temperature environment (when outdoor temperature under 32 °F (0 °C)), after cooling operation is executed, water in the drain hose could be frozen. Once drain water is frozen, the drain hose will be blocked and water leakage may result at the indoor unit.

Installation method of Drain cap

Use a hexagonal wrench 3/16 in. (4 mm) at opposite side to insert the drain cap, till the drain cap contacts the tip of drain cock.

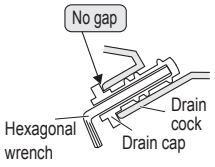

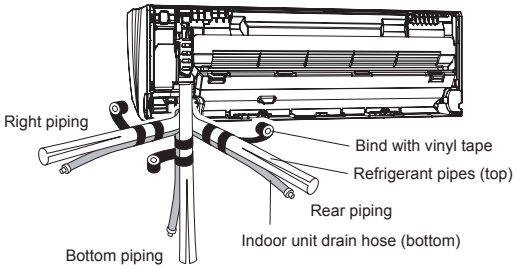

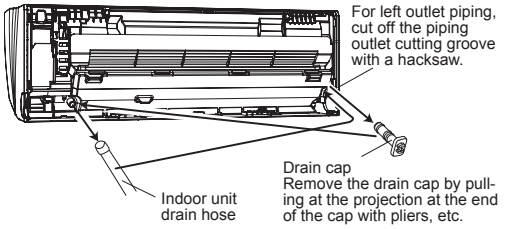

Removal method of drain hose

Remove the screw at the left of drain hose and pull out drain hose.

Installation method of drain hose

Vertically insert the drain hose toward the inside, so that the drain fixture (white) can accurately align with the screw hole around the drain cock.
After inserting and before replacing, please reinstall and fix the removed screws.

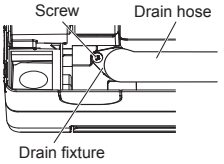

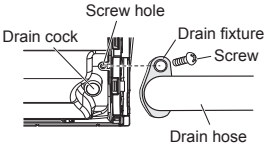

- Please hold around the joint of the drain hose during working.
- As the screw is inside, be sure to use screwdriver treated with magnet.

- For left piping and left rear piping, align the marks on the wall hook bracket and shape the connection pipe.
- Bend the connection piping at a bend radius of 2-3/4 in. (70 mm) or more and install no more than 1-6/16 in. (35 mm) from the wall.
- After passing the indoor piping and drain hose through the wall hole, hang the indoor unit on the hooks at the top and bottom of the wall hook bracket.

[Installing the indoor unit]

- Hang the indoor unit from the hooks at the top of the wall hook bracket.
- Insert the spacer, etc. between the indoor unit and the wall hook bracket and separate the bottom of the indoor unit from the wall.

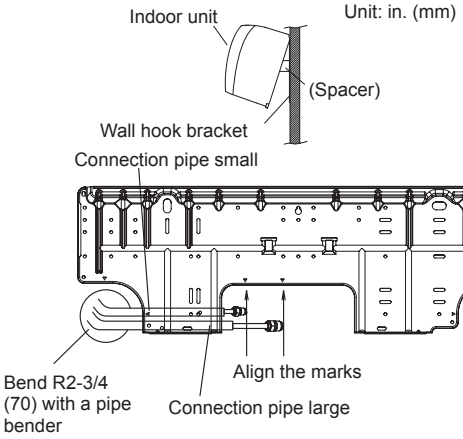

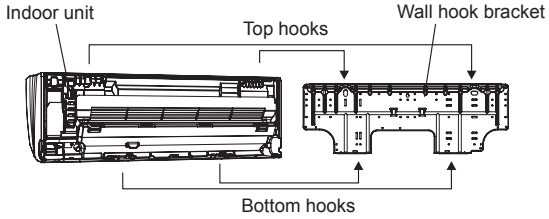

After hooking the indoor unit to the top hook, hook the fittings of the indoor unit to the 2 bottom hooks while lowering the unit and pushing it against the wall.

5.6. Flare connection (Pipe connection)

⚠ CAUTION

Tighten the flare nuts with a torque wrench using the specified tightening method. Otherwise, the flare nuts could break after a prolonged period, causing refrigerant to leak and generate hazardous gas if the refrigerant comes into contact with a flame.

5.6.1. Flaring

Use special pipe cutter and flare tool exclusive for R410A.

(1) Cut the connection pipe to the necessary length with a pipe cutter.

(2) Hold the pipe downward so that cuttings will not enter the pipe and remove any burrs.

(3) Insert the flare nut (always use the flare nut attached to the indoor unit(s) and outdoor unit respectively) onto the pipe and perform the flare processing with a flare tool. Use the special R410A flare tool, or the conventional flare tool. Leakage of refrigerant may result if other flare nuts are used.
(4) Protect the pipes by pinching them or with tape to prevent dust, dirt, or water from entering the pipes.

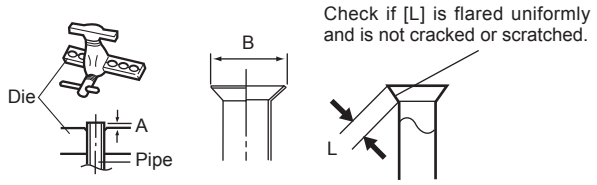

Pipe outside diameter [in. (mm)]	Dimension A [in. (mm)] Flare tool for R410A, clutch type	Dimension B [in. (mm)]
1/4 (6.35)	0 to 0.020 (0 to 0.5)	3/8 (9.1)
3/8 (9.52)		1/2 (13.2)
1/2 (12.70)		5/8 (16.6)
5/8 (15.88)		3/4 (19.7)
3/4 (19.05)		15/16 (24.0)

When using conventional flare tools to flare R410A pipes, the dimension A should be approximately 0.020 in. (0.5 mm) more than indicated in the table (for flaring with R410A flare tools) to achieve the specified flaring. Use a thickness gauge to measure the dimension A.

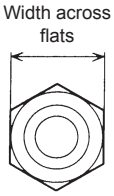

Pipe outside diameter [in. (mm)]	Width across flats of Flare nut [in. (mm)]
1/4 (6.35)	11/16 (17)
3/8 (9.52)	7/8 (22)
1/2 (12.70)	1 (26)
5/8 (15.88)	1-1/8 (29)
3/4 (19.05)	1-7/16 (36)

5.6.2. Bending pipes

- If pipes are shaped by hand, be careful not to collapse them.
- Do not bend the pipes in an angle more than 90°.
- When pipes are repeatedly bend or stretched, the material will harden, making it difficult to bend or stretch them anymore.
- Do not bend or stretch the pipes more than 3 times.

⚠ CAUTION

- To prevent breaking of the pipe, avoid sharp bends.
- If the pipe is bent repeatedly at the same place, it will break.

5.6.3. Pipe connection

⚠ CAUTION

- Be sure to Install the pipe against the port on the indoor unit correctly. If the centering is improper, the flare nut cannot tighten smoothly. If the flare nut is forced to turn, the threads will be damaged.
- Do not remove the flare nut from the indoor unit pipe until immediately before connecting the connection pipe.
- Hold the torque wrench at its grip, keeping it in the right angle with the pipe, in order to tighten the flare nut correctly.
- Tighten the flare nuts with a torque wrench using the specified tightening method. Otherwise, the flare nuts could break after a prolonged period, causing refrigerant to leak and generate hazardous gas if the refrigerant comes into contact with a flame.

⚠ CAUTION

- Connect the piping so that the control box cover can easily be removed for servicing when necessary.
- In order to prevent water from leaking into the control box, make sure that the piping is well insulated.

When the flare nut is tightened properly by your hand, hold the body side coupling with a wrench, then tighten with a torque wrench. (See the table below for the flare nut tightening torques.)

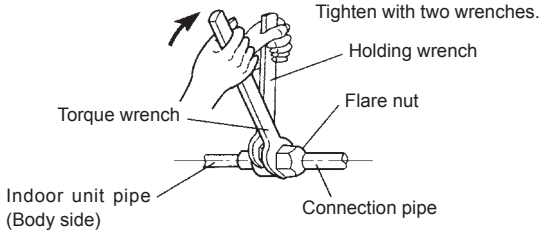

Flare nut [in. (mm)]	Tightening torque [lb·ft (N·m)]
1/4 (6.35) dia.	11.8 to 13.3 (16 to 18)
3/8 (9.52) dia.	23.6 to 31.0 (32 to 42)
1/2 (12.70) dia.	36.1 to 45.0 (49 to 61)
5/8 (15.88) dia.	46.5 to 55.3 (63 to 75)
3/4 (19.05) dia.	66.4 to 81.1 (90 to 110)

6. ELECTRICAL WIRING

Cable	Cable size	Remarks
Connection cable	14AWG UL 1505	3 cable+Earth (Ground), 1φ 208/230 V

Max. Cable Length: Limit voltage drop to less than 2%. Increase cable gauge if voltage drop is 2% or more.

6.1. Wiring system diagram

⚠ WARNING

- Before connecting the wires, make sure the power supply is OFF.
- Every wire must be connected firmly.
- No wire should be allowed to touch refrigerant tubing, the compressor or any moving part.
- Loose wiring may cause the terminal to overheat or result in unit malfunction. A fire hazard may also exist. Therefore, be sure all wiring is tightly connected.
- Connect wires to the matching numbers of terminals.

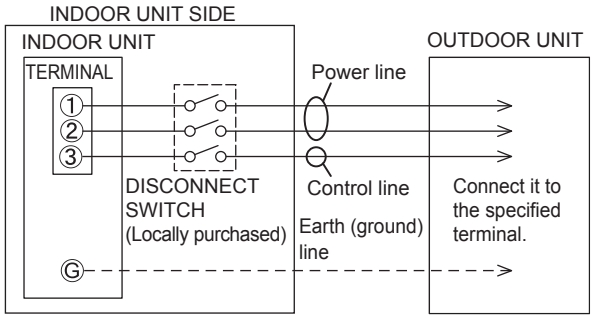

6.2. Indoor unit wiring

1. Remove the wire cover. (Remove 1 screw.)
2. Remove the cable clamp.
3. Ring terminals connect to the connection cable.
4. Connect the ring terminals fully into the terminal block.
5. Fasten the connection cable with a cable clamp.

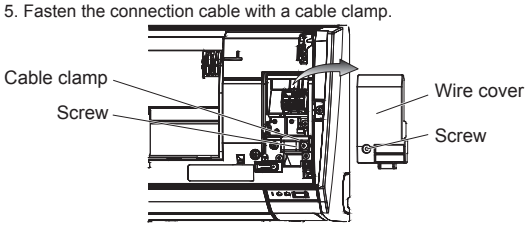

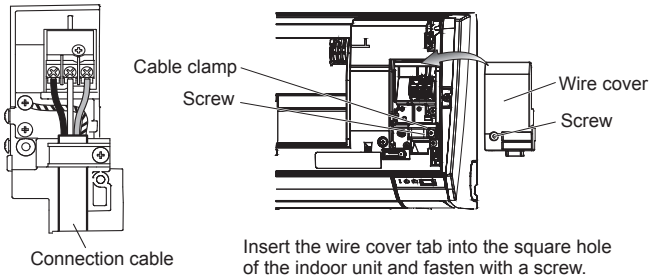

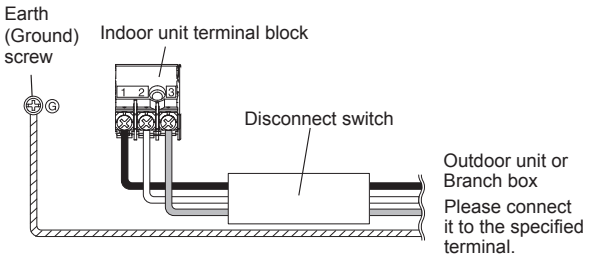

- To connect the indoor unit wires to the terminal correctly, refer to the figure for proper length.

Unit: in. (mm)

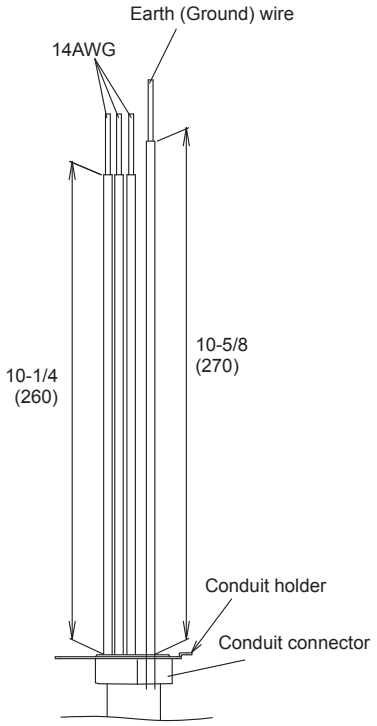

6.3. How to the install the indoor unit wire harness

(1) Remove the screws, then remove the conduit holder.
(2) Fasten the indoor unit wire harness to the conduit holder using the lock nut.
IMPORTANT: Refer to [6.1. Wiring system diagram] about the length of indoor unit wire harness.
(3) Use the screws to install the conduit holder provide with the indoor unit.
(4) Remove the screws, then remove the cable clamper.
(5) Connect indoor unit wire harness to the terminal.
Refer to the wiring diagram
(6) Use the screws to install the cable clamper.

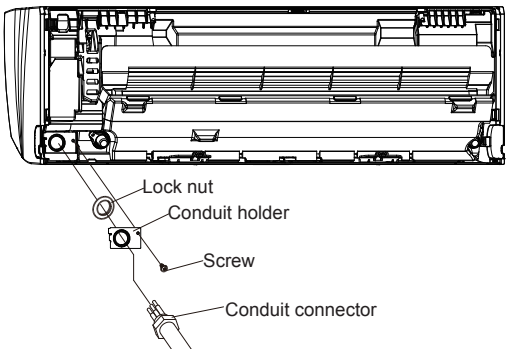

6.4. How to connect wiring to the terminals

Caution when wiring cable

When stripping off the insulation of a lead wire, always use a special tool such as a wire stripper. If there is no special tool available, carefully strip the insulation with a knife etc.
(1) Use ring terminals with insulating sleeves as shown in the figure below to connect to the terminal block.
(2) Securely clamp the ring terminals to the wires using an appropriate tool so that the wires do not come loose.

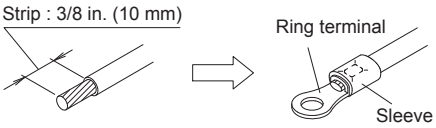

(3) Use the specified wires, connect them securely, and fasten them so that there is no stress placed on the terminals.
(4) Use an appropriate screwdriver to tighten the terminal screws. Do not use a screwdriver that is too small, otherwise, the screw heads may be damaged and prevent the screws from being properly tightened.
(5) Do not tighten the terminal screws too much, otherwise, the screws may break.

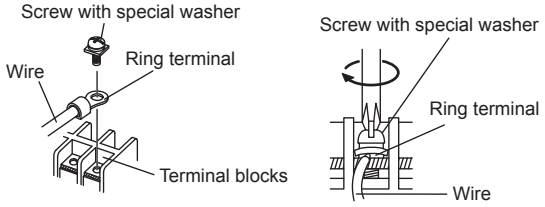

(6) See the table below for the terminal screw tightening torques.

Tightening torque [lbf·in (N·m)]	
M4 screw	11 to 16 (1.2 to 1.8)

⚠ CAUTION

- Attach the cable clamp firmly by holding the connection cable, and make sure that the clamp is fixed securely.
  Incomplete attachment of the cable clamp might cause a malfunction of the open panel.
- Match the terminal block numbers and connection cable colors with those of the outdoor unit.
  Erroneous wiring may cause burning of the electric parts.
- Connect the connection cables firmly to the terminal block. Imperfect installation may cause a fire.
- Always fasten the outside covering of the connection cable with the cable clamp. (If the insulator is chafed, electric discharge may occur.)
- Always connect the ground wire.
- Do not use the earth screw of the indoor unit for the connection other than a specified outdoor unit.

7. FINISHING

(1) Insulate between pipes.
- Insulate suction and discharge pipes separately.
- For rear, right, and bottom piping, overlap the connection pipe heat insulation and indoor unit pipe heat insulation and bind them with vinyl tape so that there is no gap.
- For left and left rear piping, butt the connection pipe heat insulation and indoor unit pipe heat insulation together and bind them with and vinyl tape so that there is no gap.
- For left and left rear piping, wrap the area which accommodates the rear piping housing section with cloth tape.
- For left and left rear piping, bind the connection cable to the top of the pipe with vinyl tape.
- For left and left rear piping, bundle the piping and drain hose together by wrapping them with cloth tape over the range within which they fit into the rear piping housing section.

(2) Temporarily fasten the connection cable along the connection pipe with vinyl tape. (Wrap to about 1/3 the width of the tape from the bottom of the pipe so that water does not enter.)
(3) Fasten the connection pipe to the outside wall with a saddle, etc.
(4) Fill the gap between the outside wall pipe hole and the pipe with sealer so that rain water and wind cannot blow in.
(5) Fasten the drain hose to the outside wall, etc.

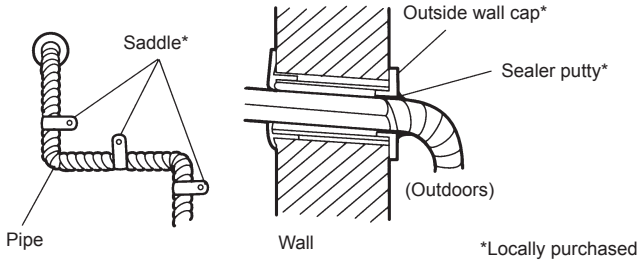

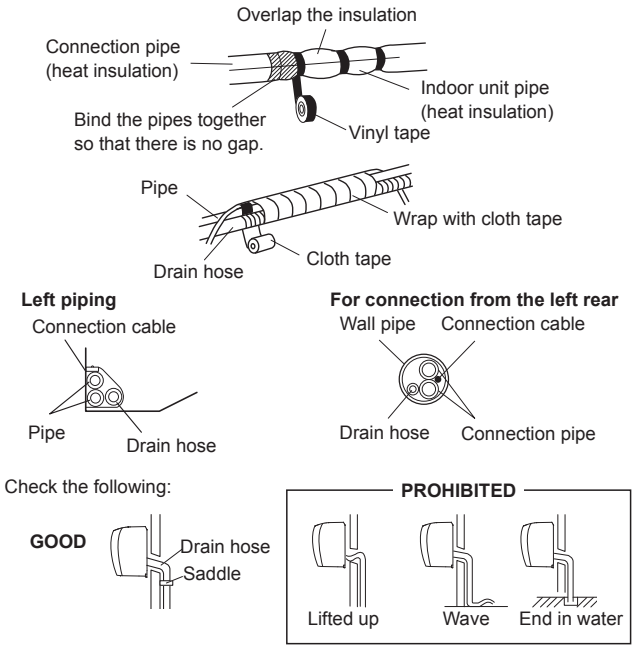

8. FRONT PANEL REMOVAL AND INSTALLATION

Intake grill removal

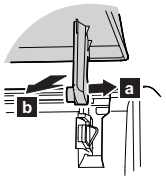

Open the intake grille. While gently pressing the left and right mounting shafts of the intake grille outward "a", remove the intake grille in direction of the arrow "b".

Intake grill installation

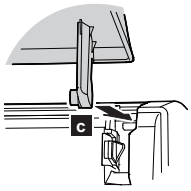

While holding the grille horizontal, set the left and right mounting shafts into the pillow blocks at the top of the panel "c".
To latch each shaft properly, insert the shaft until it snaps.

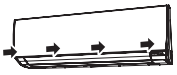

Press 4 places on the intake grille to close it completely.

8.1. Front panel removal

(1) Remove intake grille (Reference the intake grille removal.)
(2) Remove 3 caps.
(3) Remove wire cover.
(4) Remove 7 screws.

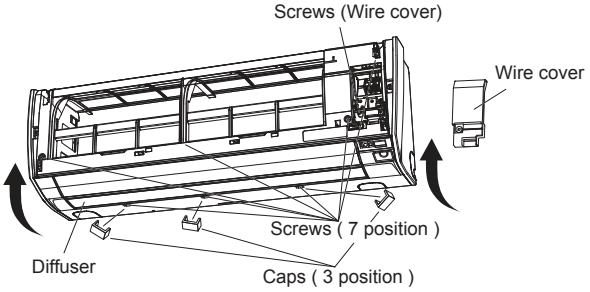

NOTE: When replacing the front panel, do not scratch or damage the diffuser.

(5) The front panel is pulled to the front, raising the upper surface, and a front panel is removed.

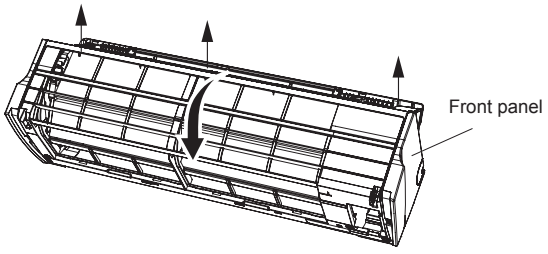

8.2. Front panel installation

(1) First, fit the lower part of the front panel, and insert top and bottom hooks. (3 top sides, 2 center)

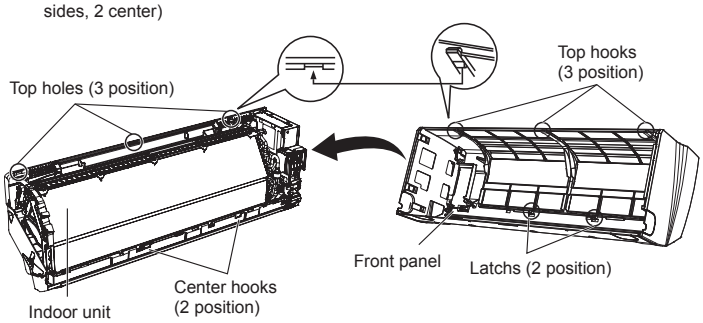

(2) Attach the 7 screws.
(3) Attach the wire cover.
(4) Attach the 3 caps.
(5) Attach the intake grille.

⚠ CAUTION

Install the Front panel and Intake grille securely. If installation is imperfect, the Front panel or Intake grille may fall off and cause injury.

9. REMOTE CONTROLLER INSTALLATION

• Check that the indoor unit correctly receives the signal from the remote controller, then install the remote controller holder.

⚠ CAUTION

• Select the remote controller holder selection site by paying careful attention to the following:
Avoid places in direct sunlight.
Select a place that will not be affected by the heat from a stove, etc.

9.1. Remote controller holder installation

- Install the remote controller a maximum distance of 22 ft. (7 m) from the remote control receiver. However, when installing the remote controller, check that it operates correctly.
- Install the remote controller holder to a wall, pillar, etc. with the tapping screw.

remote controller holder fixing

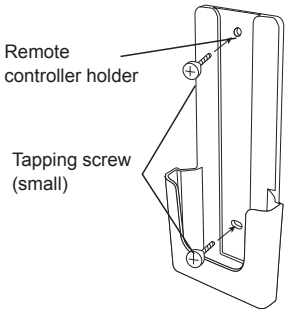

remote controller mounting

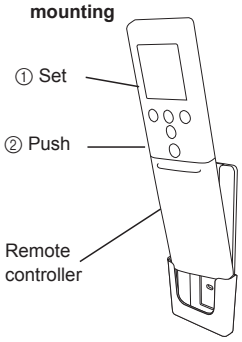

10. OPTIONAL KIT INSTALLATION

This air conditioner can be connected with the following optional kits.
- Wired remote controller
- Simple remote controller
- External connect kit

10.1. Before installing wired remote controller

- When you use wired remote controller, some functions may not be used.

⚠ CAUTION

- Before installing, be sure to disconnect all power supply.
- Don't touch the heat exchanger.
- During installing or removing operation, be sure not to have wire caught by parts or draw it hard. Or it may result troubles to the air-conditioner.
- Avoid place in direct sunlight.
- Select place that will not be affected by the heat from a stove, etc
- Before setting up the optional kit, please confirm whether air-conditioner can receive the signal.
- Do not connect the wired remote controller to the terminal for power supply.
- When connecting the wired remote controller with the indoor unit, use the connecting cable (supplied with wired remote controller or simple remote controller).
- Recommended cable length of wired remote controller is 32 ft. (10 m). Make sure to do insulate of connecting part when extended the cable.

Do not connect power supply with the terminal.

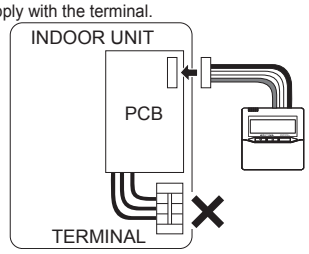

11. INSTALLATION WORK

11.1. Accessories (Communication kit)

The following installation accessories are supplied. Use them as required.

Name and Shape	Q'ty	Description
Relay control board	1	For connecting the wired remote control unit and external connect wire.
Cable tie	1	For fixing the wires from control box.
Relay wire	1	For connecting the relay control board and control unit board.
Wiring label 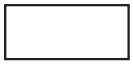	1	For displaying the additional wiring diagram.

11.2. Installation work

11.2.1. Removing intake grille and front panel

(See "9. FRONT PANEL REMOVAL AND INSTALLATION" and "9.1. Front panel removal")

11.2.2. Removing control cover

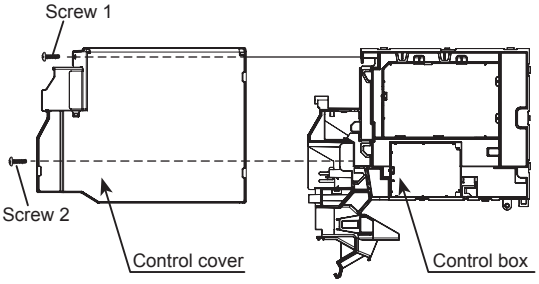

Remove the screw 1 and 2, then remove the control cover.

11.2.3. Installing relay control board and relay wire terminal

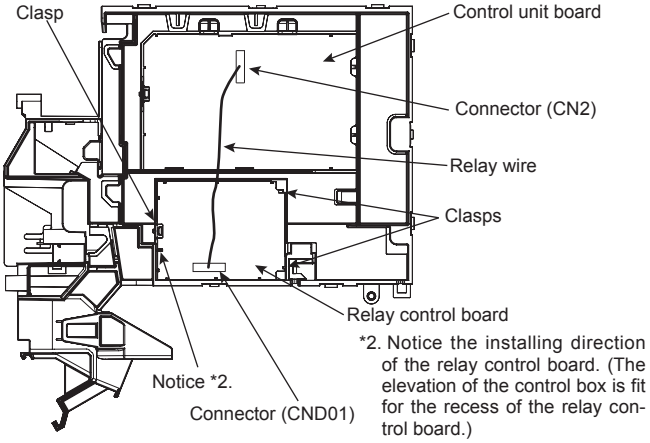

(1) Insert the relay control board toward 2 clasps.
(2) Then set the board with the clasp.
(3) Connect the relay wire terminal to the connector (CND01) on the relay control board.
(4) Connect the relay wire terminal to the connector (CN2) on the control unit board.

⚠ CAUTION

Be careful not to damage the parts on the board.
Otherwise, it will cause malfunction.

11.2.4. Installing optional kits

Remote controller cable modification

(1) Use a tool to cut off the terminal on the end of the remote controller cable, and then remove the insulation from the cut end of the cable.
(2) Connect the remote controller cable and connecting cable. (Supplied with wired remote controller.)

Important: Be sure to insulate the connection between the cables.

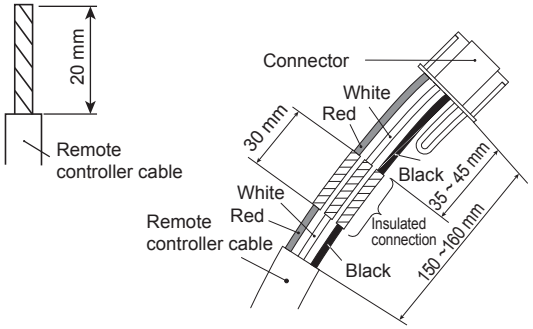

Installing the wired remote controller terminal (sold separately)

Connect the wired remote controller terminal to the connector (CNC01) on the relay control board.

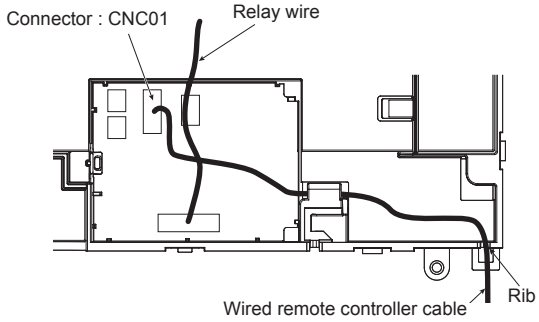

Installing the external connect kit terminal (sold separately)

Connect the wire of external input/output to the board of external connect kit.
(EXTERNAL INPUT CONNECT TO NO. CNA01
EXTERNAL OUTPUT CONNECT TO NO. CNB01, CNB02)

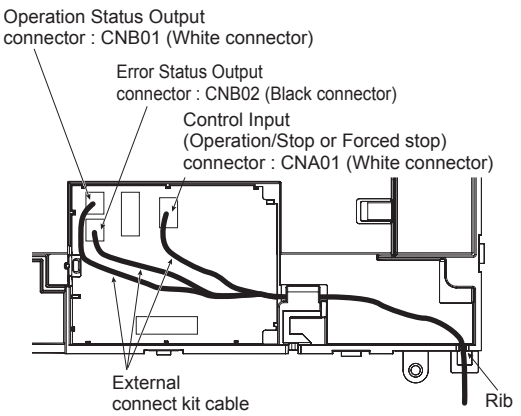

Fixing the wires

After connecting the terminals, thread the wires through the clasp and rib of the control box as circled in the figure below.
Then fix the wires onto the control box with the provided cable tie.

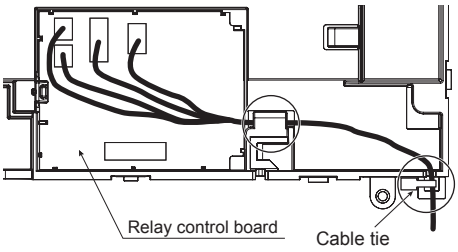

11.2.5. Installing the control cover

(1) Attach the control cover.
(2) Attach the 2 screws.

11.2.6. Labelling

Paste the wiring label beside the label for schematic diagram inside the front panel.

11.2.7. Installing the front panel and intake grille

(See “9. FRONT PANEL REMOVAL AND INSTALLATION” and “9.2. Front panel installation”)

12. SELECTING THE REMOTE CONTROLLER CUSTOM CODE

When two or more air conditioners are installed in a room and the remote controller is operating an air conditioner other than the one you wish to set, change the custom code of the remote controller to operate only the air conditioner you wish to set (4 selections possible).

Selecting the Remote Controller Custom Code

Use the following steps to select the custom code of the remote controller. (Note that the air conditioner cannot receive a signal if the air conditioner has not been set for the custom code.)

(1) Press the START/STOP (⏻/|) button until only the clock is displayed on the remote controller display.
(2) Press the MODE button for at least 5 seconds to display the current custom code (initially set to A).
(3) Press the SET TEMP. (⋀ / ⋁) buttons to change the custom code between A→B→C→D.
Match the code on the display to the air conditioner custom code.
(4) Press the MODE button again to return to the clock display. The custom code will be changed.

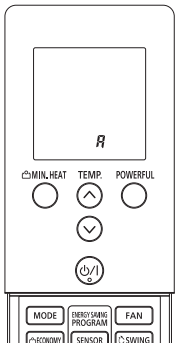

- If no buttons are pressed within 30 seconds after the custom code is displayed, the system returns to the original clock display. In this case, start again from step 1.
- The air conditioner custom code is set to A prior to shipment.

13. FUNCTION SETTING

Perform the “FUNCTION SETTING” according to the installation conditions using the remote controller.

⚠ CAUTION

- Confirm whether the wiring work for Outdoor unit has been finished.
- Confirm that the cover for the electrical enclosure on the outdoor unit is in place.

- This procedure changes to the function settings used to control the indoor unit according to the installation conditions. Incorrect settings can cause the indoor unit to malfunction.
- After the power is turned on, perform the “FUNCTION SETTING” according to the installation conditions using the remote controller.
- The settings may be selected between the following two: Function Number or Setting Value.
- Settings will not be changed if invalid numbers or setting values are selected.
- Match the custom code of the indoor unit and the custom code of the remote controller. (See 12. SELECTING THE REMOTE CONTROLLER CUSTOM CODE.)

Entering the Function Setting Mode

While pressing the POWERFUL button and SET TEMP. (⋀) simultaneously, press the RESET button to enter the function setting mode.

Selecting the Function Number and Setting Value

(1) Press the SET TEMP. (⋀ / ⋁) buttons to select the function number. (Press the MIN. HEAT button to switch between the left and right digits.)
(2) Press the POWERFUL button to proceed to setting the value. (Press the POWERFUL button again to return to the function number selection.)
(3) Press the SET TEMP. (⋀ / ⋁) buttons to select the setting value. (Press the MIN. HEAT button to switch between the left and right digits.)
(4) Press the MODE button, in the order listed to confirm the settings.
Please confirm that the beep sounds.
(5) Next, please press START/STOP (⏻/|) button.
Please confirm that the beep sounds.
(6) Press the RESET button to cancel the function setting mode.
(7) After completing the FUNCTION SETTING, be sure to turn off the power and turn it on again.

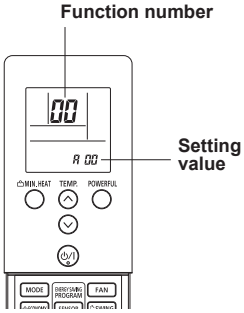

⚠ CAUTION

After turning off the power, wait 30 seconds or more before turning on it again.

The Function Setting does not become active unless the power is turned off then on again.

13.1. Function details

Filter Sign

Select appropriate intervals for displaying the filter sign on the indoor unit according to the estimated amount of dust in the air of the room.
If the indication is not required, select “No indication” (03).

(♦... Factory setting)

Function Number	Setting Value	Setting Description	
11	00	Standard (400 hours)	
	01	Long interval (1000 hours)	
	02	Short interval (200 hours)	
	03	No indication	♦

Auto Restart

Enable or disable automatic restart after a power interruption.

(♦... Factory setting)

Function Number	Setting Value	Setting Description	
40	00	Enable	♦
	01	Disable	

* Auto restart is an emergency function such as for power outage etc. Do not attempt to use this function in normal operation. Be sure to operate the unit by remote controller or external device.

Room temperature sensor switching
(Only for Wired remote controller)
When using the Wired remote controller temperature sensor, change the setting to “Both” (01).

(♦... Factory setting)

Function Number	Setting Value	Setting Description	
42	00	Indoor unit	♦
	01	Both	

00: Sensor on the indoor unit is active.
01: Sensors on both indoor unit and wired remote controller are active.
* Remote controller sensor must be turned on by using the remote controller

Remote controller custom code
(Only for wireless remote controller)
The indoor unit custom code can be changed.
Select the appropriate custom code.

(♦... Factory setting)

Function Number	Setting Value	Setting Description	
44	00	A	♦
	01	B	
	02	C	
	03	D	

External input control
“Operation/Stop” mode or “Forced stop” mode can be selected.

(♦... Factory setting)

Function Number	Setting Value	Setting Description	
46	00	Operation/Stop mode	♦
	01	(Setting prohibited)	
	02	Forced stop mode	

Room temperature sensor switching (Aux.)
To use the temperature sensor on the wired remote controller only, change the setting to “Wired remote controller” (01). This function will only work if the function setting 42 is set at “Both” (01)

(♦... Factory setting)

Function Number	Setting Value	Setting Description	
48	00	Both	♦
	01	Wired remote controller	

Indoor unit fan control for energy saving for cooling
Enables or disables the power-saving function by controlling the indoor unit fan rotation when the outdoor unit is stopped during cooling operation.

(♦... Factory setting)

Function Number	Setting Value	Setting Description	
49	00	Disable	♦
	01	Enable	

00: When the outdoor unit is stopped, the indoor unit fan operates continuously following the setting on the remote controller.
01: When the outdoor unit is stopped, the indoor unit fan operates intermittently at a very low speed.

Setting record
Record any changes to the settings in the following table.

Setting Description	Setting Value
Filter sign	
Auto restart	
Room temperature sensor switching	
Remote controller custom code	
External input control	
Room temperature sensor switching (Aux.)	
Indoor unit fan control for energy saving for cooling	

After completing the FUNCTION SETTING, be sure to turn off the power and turn it on again.

13.2. Temperature correction

NOTE:
When changing Function 95, perform this setting before other Room temp. control settings (Function 30, 31, 92, 93).
If Function 95 is not set first, Room temperature control settings (Function 30, 31, 92, 93) will be reset and you must re-do them again.

Heat Insulation condition (building insulation)
Heat insulation conditions differ according to the installed environment.
Standard insulation “00” allows system to rapidly respond to the cooling or heating load changes.
High insulation “01” is when the heat insulation structure of the building is high and does not require system to rapidly respond to cooling or heating load changes.
When High insulation “01” is selected;

- Overheating (overcooling) is prevented at the start-up.
- All room temp. control settings (Function 30, 31, 92, 93) will reset to No correction [0.0°F (0.0°C)].

(♦... Factory setting)

Function Number	Setting Value	Setting Description	
95	00	Standard insulation	♦
	01	High insulation	

Room temperature control for indoor unit sensor
Depending on the installed environment, correction of the room temperature sensor may be required.
Select the appropriate control setting according to the installed environment.
The temperature correction values show the difference from the Standard setting “00” (manufacturer’s recommended value).
* When Function 95-01(High insulation) is set, the Standard setting “00” will be the same as No correction “01” [0.0°F (0.0°C)].

(♦... Factory setting)

Function Number		Setting Value	Setting Description		
30 (For cooling)	31 (For heating)	00	Standard setting*	♦	
		01	No correction 0.0°F (0.0°C)		
		02	-1°F (-0.5°C)		More Cooling Less Heating
		03	-2°F (-1.0°C)		
		04	-3°F (-1.5°C)		
		05	-4°F (-2.0°C)		
		06	-5°F (-2.5°C)		
		07	-6°F (-3.0°C)		
		08	-7°F (-3.5°C)		
		09	-8°F (-4.0°C)		
		10	+1°F (+0.5°C)		Less Cooling More Heating
		11	+2°F (+1.0°C)		
		12	+3°F (+1.5°C)		
		13	+4°F (+2.0°C)		
		14	+5°F (+2.5°C)		
		15	+6°F (+3.0°C)		
		16	+7°F (+3.5°C)		
		17	+8°F (+4.0°C)		

Room temperature control for wired remote controller sensor
Depending on the installed environment, correction of the wire remote temperature sensor may be required.
Select the appropriate control setting according to the installed environment.
To change this setting, set Function 42 to Both “01”.
Ensure that the Thermo Sensor icon is displayed on the remote controller screen.

(♦... Factory setting)

Function number		Setting value	Setting description	
92 (For cooling)	93 (For heating)	00	No correction 0.0°F (0.0°C)	♦
		01	No correction 0.0°F (0.0°C)	
		02	-1°F (-0.5°C)	More Cooling Less Heating
		03	-2°F (-1.0°C)	
		04	-3°F (-1.5°C)	
		05	-4°F (-2.0°C)	
		06	-5°F (-2.5°C)	
		07	-6°F (-3.0°C)	
		08	-7°F (-3.5°C)	
		09	-8°F (-4.0°C)	
		10	+1°F (+0.5°C)	Less Cooling More Heating
		11	+2°F (+1.0°C)	
		12	+3°F (+1.5°C)	
		13	+4°F (+2.0°C)	
		14	+5°F (+2.5°C)	
		15	+6°F (+3.0°C)	
		16	+7°F (+3.5°C)	
		17	+8°F (+4.0°C)	

Setting record

- Record any changes to the settings in the following table.

Setting	Setting Value	
Heat Insulation condition (building insulation)		
Room temperature control for indoor unit sensor	Cooling	
	Heating	
Room temperature control for wired remote controller sensor	Cooling	
	Heating	

After completing the Function Setting, be sure to turn off the power and turn it on again.

14. TEST RUN

Check items

(1) Is operation of each button on the remote control unit normal?
(2) Does each lamp light normally?
(3) Do air flow direction louvers operate normally?
(4) Is the drain normal?
(5) Do not have an abnormal noise and vibration during operation?

- Do not operate the air conditioner in test run for a long time.

[Operation method]

- For the operation method, refer to the operating manual.
- The outdoor unit, may not operate, depending on the room temperature. In this case, keep on pressing the MANUAL AUTO button of the indoor unit for more than 10 seconds. The operation indicator lamp and timer indicator lamp will begin to flash simultaneously during cooling test run. Then, heating test run will begin in about three minutes when HEAT is selected by the remote control operation. (Please follow the operating manual for remote control operation.)

- To end test operation, press the remote controller START/STOP button. (When the air conditioner is running by pressing the TEST RUN button, the OPERATION Lamp and TIMER Lamp will simultaneously flash slowly.)

[Using the wired remote control] (Option)

For the operation method, refer to the operating manual.

(1) Stop the air conditioner operation.
(2) Press the MODE button and the FAN button simultaneously for 2 seconds or more to start the test run.

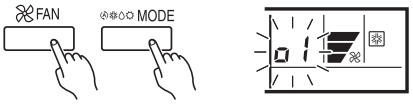

Test run display

(3) Press the START/STOP button to stop the test run.

15. CUSTOMER GUIDANCE

Explain the following to the customer in accordance with the operating manual:
(1) Starting and stopping method, operation switching, temperature adjustment, timer, air flow switching, and other remote control unit operations.
(2) Air filter removal and cleaning, and how to use the air louvers.
(3) Give the operating manual to the customer.

16. ERROR CODES

If you use a wireless remote controller, the lamp on the photo detector unit will output error codes by way of blinking patterns. If you use a wired remote controller, error codes will appear on the remote control display. See the lamp blinking patterns and error codes in the table. An error display is displayed only during operation.

Error display			Wired remote controller Error code	Description
OPERATION lamp (green)	TIMER lamp (orange)	ECONOMY lamp (green)		
●(1)	●(1)	◇	11	Serial communication error
●(1)	●(2)	◇	12	Wired remote controller communication error
●(1)	●(5)	◇	15	Check run unfinished
●(2)	●(1)	◇	21	Unit number or Refrigerant circuit address setting error [Simultaneous Multi]
●(2)	●(2)	◇	22	Indoor unit capacity error
●(2)	●(3)	◇	23	Combination error
●(2)	●(4)	◇	24	• Connection unit number error (indoor secondary unit) [Simultaneous Multi] • Connection unit number error (indoor unit or branch unit) [Flexible Multi]
●(2)	●(7)	◇	27	Primary unit, secondary unit set-up error [Simultaneous Multi]
●(3)	●(2)	◇	32	Indoor unit PCB model information error
●(3)	●(5)	◇	35	Manual auto switch error
●(4)	●(1)	◇	41	Room temp. sensor error
●(4)	●(2)	◇	42	Indoor unit Heat Ex. Middle temp. sensor error
●(5)	●(1)	◇	51	Indoor unit fan motor error
●(5)	●(3)	◇	53	Drain pump error
●(5)	●(7)	◇	57	Damper error
●(5)	●(8)	◇	58	Intake grille error
●(5)	●(15)	◇	5U	Indoor unit error
●(6)	●(2)	◇	62	Outdoor unit main PCB model information error or communication error
●(6)	●(3)	◇	63	Inverter error
●(6)	●(4)	◇	64	Active filter error, PFC circuit error
●(6)	●(5)	◇	65	Trip terminal L error
●(6)	●(10)	◇	6A	Display PCB microcomputers communication error
●(7)	●(1)	◇	71	Discharge temp. sensor error
●(7)	●(2)	◇	72	Compressor temp. sensor error
●(7)	●(3)	◇	73	Outdoor unit Heat Ex. liquid temp. sensor error

●(7)	●(4)	◇	74	Outdoor temp. sensor error
●(7)	●(5)	◇	75	Suction Gas temp. sensor error
●(7)	●(6)	◇	76	• 2-way valve temp. sensor error • 3-way valve temp. sensor error
●(7)	●(7)	◇	77	Heat sink temp. sensor error
●(8)	●(2)	◇	82	• Sub-cool Heat Ex. gas inlet temp. sensor error • Sub-cool Heat Ex. gas outlet temp. sensor error
●(8)	●(3)	◇	83	Liquid pipe temp. sensor error
●(8)	●(4)	◇	84	Current sensor error
●(8)	●(6)	◇	86	• Discharge pressure sensor error • Suction pressure sensor error • High pressure switch error
●(9)	●(4)	◇	94	Trip detection
●(9)	●(5)	◇	95	Compressor rotor position detection error
●(9)	●(7)	◇	97	Outdoor unit fan motor error
●(9)	●(9)	◇	99	4-way valve error
●(10)	●(1)	◇	A1	Discharge temp. error
●(10)	●(3)	◇	A3	Compressor temp. error
●(10)	●(4)	◇	A4	High pressure error
●(10)	●(5)	◇	A5	Low pressure error
●(13)	●(2)	◇	J2	Branch boxes error [Flexible Multi]

Display mode ● : 0.5s ON / 0.5s OFF
◇ : 0.1s ON / 0.1s OFF
( ) : Number of flashing

[Troubleshooting with the indoor unit display]

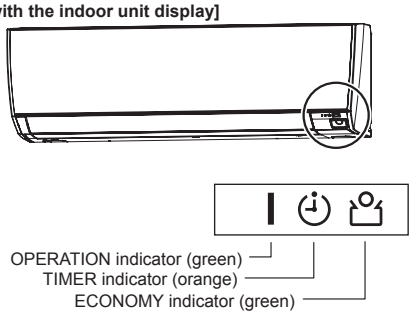

[Troubleshooting with the Wired Remote Controller Display (Option)]
If an error occurs, the following display will be shown. ("Er" will appear in the set room temperature display.)