FUJITSU

AIRSTAGE Centauri

SUBMITTAL - 09KUBS1G

Job Name:_____ Date:_____

Location:_____

R32

Indoor Unit: **AGUH09KUAS**

Outdoor Unit: **AOUH09KUBS1**

FEATURES

INDOOR UNIT:

- Floor-Mounted Units are designed for comfort where wall space is limited, delivering powerful, quiet performance with flexible installation.
- Whisper-quiet operation with sound levels as low as 22dB
- Multiple fan speed options; Auto, High, Med, Low, and Quiet
- Special Operation modes available:
  - Economy Mode/ Energy Saving/ Powerful Mode / Minimum Heat Mode / Automatic defrosting operation / Auto-restart function
- Enhanced controls platform for seamless, intuitive operation:
  - Seamless control using the Optional Wireless Remote Controller (UTY-LNXUZ1)
  - Built-in Wi-Fi connectivity for remote monitoring & control via the Airstage Mobile App
  - Extended connectivity with support for third-party interface options
- Advanced scheduling and timer options offer greater control over unit operation:
  - Weekly Timer / 24-hr Timer / Sleep Function
- Offers group control, allowing seamless management of multiple units simultaneously
- Equipped with a built-in refrigerant leak detection sensor for enhanced safety and reliability
- Additional premium features include, but are not limited to:
  - Built-in external input and output for interlocking systems with 3rd party devices (Ex: Fire Alarm, Door Switch, Humidifier, Aux. Heat & more)
  - Multiple Auxiliary Heat logic options for optimized heating performance
  - Service monitoring functionality via compatible accessories (UTY-RVRU & UTY-RNRUZ-series)

OUTDOOR UNIT:

- Low GWP R-32 systems for reduced environmental impact
- INVERTER-driven compressor that offers superior performance, comfort, and energy savings
- Compact outdoor unit with extended line set lengths up to 65ft (20m)
- Outdoor Unit Low-noise operation mode
- Provides low ambient cooling and heating down to -5°F for dependable performance in extreme conditions.

7 Year Compressor WARRANTY 5 Year Parts — 7 Year Compressor, 5 Year Parts out-of-the-box Warranty.

10 Year WARRANTY Compressor & Parts — 10 Year Compressor, 10 Year Parts Warranty when registered within 60 days of installation in a residence.

12 Year WARRANTY Compressor & Parts — 12 Year Compressor, 12 Year Parts Warranty when registered within 60 days of installation in a residence and installed by a Fujitsu Elite contractor.

ENERGY STAR · Intertek · UL LISTED

Due to continuous product improvements, specifications are subject to change without notice. Please log in to the Fujitsu Portal for the most up-to-date documentation https://connect.fujitsugeneral.com

General HVAC Solutions America, Inc. • 342 Changebridge Rd, Pine Brook, NJ 07058 • Toll Free: (888) 888-3424 • www.fujitsugeneral.com

SUBMITTAL - 09KUBS1G

SPECIFICATIONS:

Indoor Unit					**AGUH09KUAS**
Outdoor Unit					**AOUH09KUBS1**
System Name					09KUBS1G
AHRI Reference #					217753692
Efficiency	SEER2			Btu/hW	26
	EER2				15.25
	HSPF 2 (IV) / HSPF 2 (V)				11.3 / 9
	COP2			kW/kW	3.92
	Energy Star*9				ES, ESCC, ESME
Operation Range	Cooling			°F (°C)	-5 to 122*8 (-21 to 50*8)
	Heating				-5 to 75 (-21 to 24)
Capacity	Cooling		Rated	Btu/h	9,000
			Min.—Max.		3,100—13,000
	Heating	47°FDB (Outdoor temp.)	Rated		12,000
			Min.—Max.		3,100—16,000
		17°FDB (Outdoor temp.)*1	Rated		7,700
			Max.		10,800
		5°FDB (Outdoor temp.)*2	Rated		10,100
			Max.		10,100
Connection pipe	Size		Liquid	in (mm)	Ø1/4 (Ø6.35)
			Gas		Ø3/8 (Ø9.52)
	Method				Flare
	Pre-charge length			ft (m)	49 (15)
	Min. length				17 (5)
	Max. length				65 (20)
	Max. height difference				49 (15)
Indoor Dimensions (H x W x D)	Net			in (mm)	23-5/8 × 29-1/8 × 7-7/8 (600 × 740 × 200)
	Gross				27-9/16 × 32-5/16 × 12-3/16 (700 × 820 × 310)
Indoor Weight	Net			lb (kg)	31 (14.0)
	Gross				39 (17.5)
Outdoor Dimensions (H x W x D)	Net			in (mm)	21-5/16 × 31-7/16 x 11-7/16 (542 × 799 × 290)
	Gross				23-11/16 × 37 × 14-3/4 (602 × 940 × 375)
Outdoor Weight	Net			lb (kg)	71 (32)
	Gross				77 (35)
Indoor Fan	Airflow rate	Cooling	High	CFM ($m^3$3/h)	336 (570)
			Med		271 (460)
			Low		212 (360)
			Quiet		159 (270)
		Heating	High		353 (600)
			Med		283 (480)
			Low		218 (370)
			Quiet		159 (270)
	Type x Qty				Crossflow fan x 2
	Motor output			W	16×2
Outdoor Fan	Airflow rate	Cooling		CFM (m^3/h)	906 (1,540)
		Heating			906 (1,540)
	Type x Qty				Propeller fan × 1
	Motor output			W	23
Indoor Sound Pressure Level*4	Cooling		High	dB (A)	41
			Med		36
			Low		30
			Quiet		22
	Heating		High		41
			Med		36
			Low		30
			Quiet		22
Outdoor Sound Pressure Level*4	Cooling				45
	Heating				48

SUBMITTAL - 09KUBS1G

SPECIFICATIONS:

Refrigerant	Type				R32
	Charge			lb oz	1 lb 14 oz
				g	850
	Additional Charge Calculation			oz/ft	0.22
				g/m	20
Refrigerant Oil	Type				POE (RB68A)
	Amount			in 3 (cm3)	20.7 (340)
Moisture removal				pints/h (L/h)	3.6 (1.7)
Drain hose(IU)	Material				Polypropylene + Linear low-density polyethylene
	Tip Diameter			in (mm)	I.D.: Ø17/32 (Ø13.8) O.D.: Ø5/8 to Ø21/32 (Ø15.8 to Ø16.7)
Indoor Operation range	Cooling			°F (°C)	64 to 90 (18 to 32)
				%RH	80 or less
	Heating			°F (°C)	60 to 86 (16 to 30)
Electrical	System Power Supply	Voltage		V	208/230
		Frequency		Hz	60
		Available voltage range		V	187-253
	Current	Cooling	Rated	A	3.1
		Heating			4.4
	Maximum Operating Current*3	Cooling			6.4
		Heating			8.9
	Outdoor Starting Current				4.5
	Minimum Circuit Ampacity*5				11
	Wiring spec.*6	MAX. CKT. BKR*7			15
Input Power	Cooling		Rated	kW	0.59
			Min.—Max.		1.15
	Heating	47°FDB (Outdoor temp.)	Rated		0.9
			Min.—Max.		1.75
		17°FDB (Outdoor temp.)*1	Rated		0.8
			Max.		1.6
		5°FDB (Outdoor temp.)*2	Rated		1.525
			Max.		1.525
Power Factor	Cooling			%	82.7
	Heating				88.9

Notes:

- Specifications are based on the following conditions:
  - Cooling: Indoor temperature of 80°FDB/67°FWB (26.67°CDB/19.44°CWB), and outdoor temperature of 95°FDB/75°FWB (35°CDB/23.9°CWB).
  - Heating: Indoor temperature of 70°FDB/60°FWB (21.11°CDB/15.56°CWB), and outdoor temperature of 47°FDB/43°FWB (8.33°CDB/6.11°CWB).
  - *1: Heating (17°F): Indoor temperature of 70°FDB/60°FWB (21.11°CDB/15.56°CWB), and outdoor temperature of 17°FDB/15°FWB (-8.33°CDB/-9.44°CWB).
  - *2: Heating (5°F): Indoor temperature of 70°FDB/60°FWB (21.11°CDB/15.56°CWB), and outdoor temperature of 5°FDB/4°FWB (-15.0°CDB/-15.56°CWB).
  - Test conditions are based on AHRI 210/240 2023.
  - Pipe length: 25 ft (7.5 m), Height difference: 0 ft (0 m). (Between outdoor unit and indoor unit.)
- *3: Maximum current:
  - The maximum value when operated within the operation range.
  - The total current of indoor unit and outdoor unit.
- *4: Sound pressure level:
  - Measured values in manufacturer's anechoic chamber.
  - Because of the surrounding sound environment, the sound levels measured in actual installation conditions might be higher than the specified values here
- *5: Minimum Circuit Ampacity (Calculation based on UL60335-2-40)
- *6: Selected sample based on Japan Electrotechnical Standards and Codes Committee E0005.

As the regulations of wire size and circuit breaker differ in each country or region, select appropriate devices complied to the regional standard.

- *7: Maximum Circuit Breaker
- *8: Suction Temperature of the Outdoor Unit
- *9: Energy Star: ES = Energy Star, ESCC = Energy Star Cold Climate, ESME = Energy Star Most Efficient

System continues to operate below rated outdoor operation temperature range, subject to varying conditions. System has no low temperature cut out. Capacity is not tested outside of the rated temperature range

SUBMITTAL - 09KUBS1G

ACCESSORIES:

Model Number	Description
UTY-RVRU *2, 5	KAGAMI - Wired Remote Controller
UTY-RNRUZ-Series *2, 3, 5	Wired Remote Controller
UTY-RHRYZ-Series *2, 4	Wired Remote Controller - Hospitality
UTY-RSRYZ-Series *2, 4	Simple Wired Remote Controller
UTY-LNXUZ1	Wireless Remote Controller
FJ-IR-WIFI-1NA	Intesis IR Wireless AC Cloud Control Interface
UTY-VMSX	Modbus Converter
UTY-VTGX *2	Network Converter - Convert H-Series Comm. Protocol to V/J-Series Comm. Protocol (Pink Wire)
UTY-TERX *2	External Switch Controller
UTY-TTRXZ-Series *1, 2	24V Thermostat Interface
TTRXZ1-KIT *1, 2	24V Thermostat Interface Kit (UTY-TTRXZ1, UTY-WIFi Plug & 24V Transformer)
UTR-STA	Half Concealed Kit
UTY-TWRXZ3	Communication Kit
UTY-XWZX	External Wire Kit
UTY-XWZXZ5	External Connect Kit
UTZ-DUHGG2A	Hail Guard
UTZ-DUSHG2A	Snow Hood
UTZ-DUWBG2A	Wind Baffle

NOTES:

*1 This device may not be used with any other type of controls (central controller, wire/wireless RC, WiFi adapter, BMS interface).

*2 Requires Communication kit UTY-TWRXZ3 to connect this device to IDU.

*3 Refrigerant Leak Detection function is only available when using version Z6 or later

*4 Refrigerant Leak Detection function is only available when using version Z1 or later

*5 Simultaneous use with the Wireless Remote Controller is not allowed.

SUBMITTAL - 09KUBS1G

INDOOR UNIT DIMENSIONS:

Unit: in (mm)

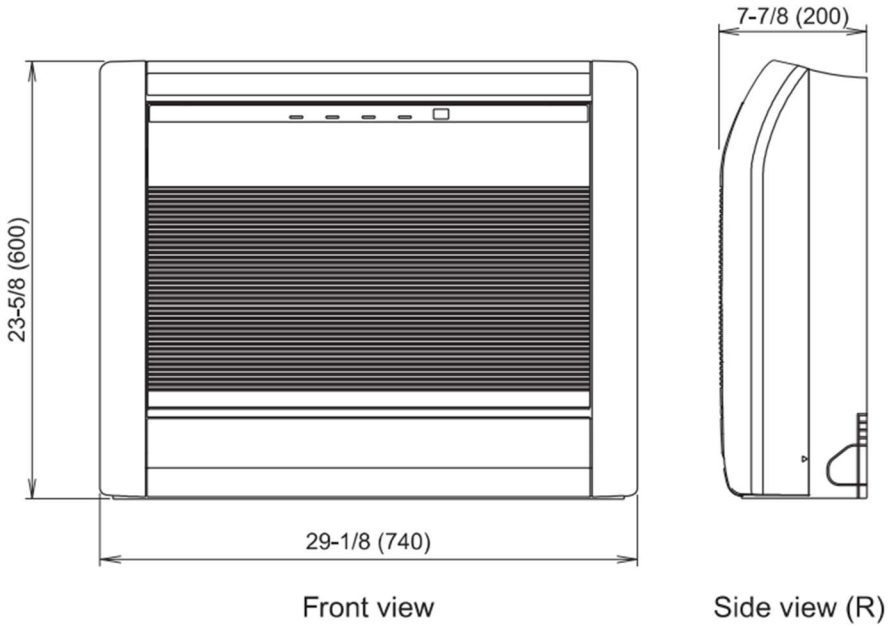

SUBMITTAL - 09KUBS1G

OUTDOOR UNIT DIMENSIONS:

Unit: in (mm)

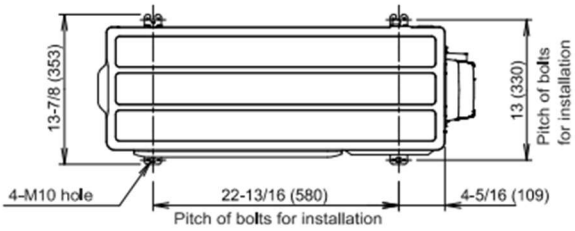

Top view

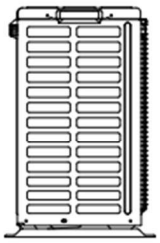

Side view

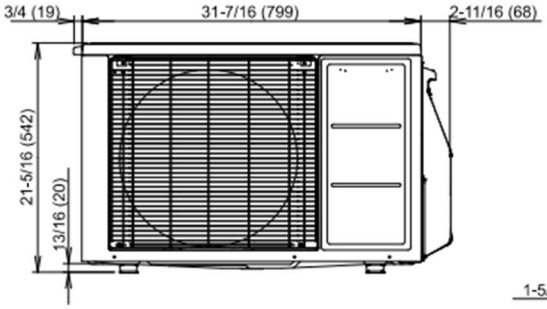

Front view

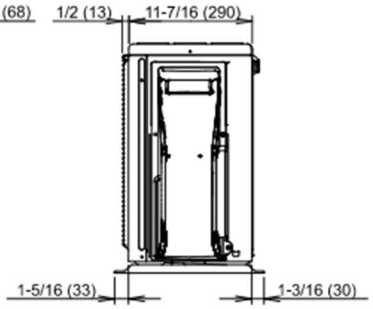

Side view

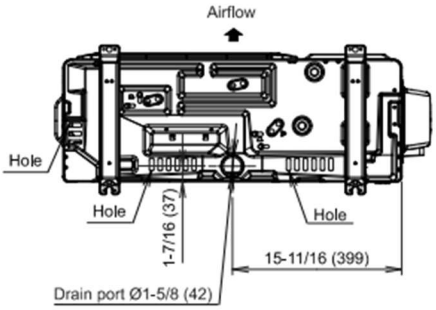

Bottom view

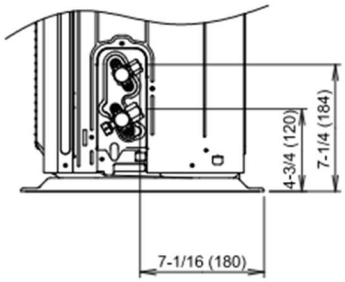

Side view (Valve part)

© GENERAL HVAC Solutions America, Inc. - 2026. GHSA distributes Fujitsu and AIRSTAGE branded products made by its group companies. The Fujitsu trademark's registered owner in the USA and Canada is Fujitsu Limited of Japan.